Feeding Concepts

46060 Noblesville
15235 Herriman Blvd.
Phone 317-773-2040
Fax
E-mail zach@feedingconcepts.com

Customer	Rhino Tool House
Street	52550 Shelby Parkway
ZIP code / City	48315 Shelby
Phone	888-727-7882
Fax	
E-mail	mike.johnson@rhinotoolhouse.com

End customer	Rhino Tool House
Street	52550 Shelby Parkway
ZIP code / City	48315 Shelby
Phone	888-727-7882
Fax	
E-mail	mike.johnson@rhinotoolhouse.com

Project name	Rhino Tool House FC-24-21740
Job number	FC-24-21740
Project description	Rhino Tool House
Commission	
Responsible for project	Zach Beck
Created on	8/30/24
Project end	
Edit date	06/30/25
by (short name)	Zach Beck
Number of pages	13

Place of installation	Feeding Concepts
Manufacturer (company)	Feeding Concepts
Make	
Part feature	
Input lead	Hardwired
Power supply	120VAC
Control voltage	24VDC
Type	Control Panel
Environmental consideration	
Regulation	
Degree of protection	IP67
Enclosures	Saginaw Enviroline

Table of contents

F06_002_en_US

Function designation	Location designation	Page	Page description	supplementary page field	Date	Edited by
		1	Title page		04/14/25	Zachary Beck
		2	Table of contents : 1 - 13		06/27/25	Zachary Beck
		3	Feeder Panel Schematic		06/27/25	Zachary Beck
		4	Feeder Panel Sensor/Light Wiring		06/27/25	Zachary Beck
		5	Feeder Panel Receptacle Schematic		06/27/25	Zachary Beck
		6	Field Distribution Layout		06/27/25	Zachary Beck
		7	Turck IO Hub #1 Wiring		06/27/25	Zachary Beck
		8	Turck IO Hub #2 Wiring		06/27/25	Zachary Beck
		9	SMC EX260-SEN1		06/27/25	Zachary Beck
		10	Pnuematics Schematic		06/25/25	Zachary Beck
		11	Panel Layout		05/19/25	Zachary Beck
		12	Enclosure Layout		04/26/25	Zachary Beck
		13	Enclosure Knockout Layout		04/26/25	Zachary Beck

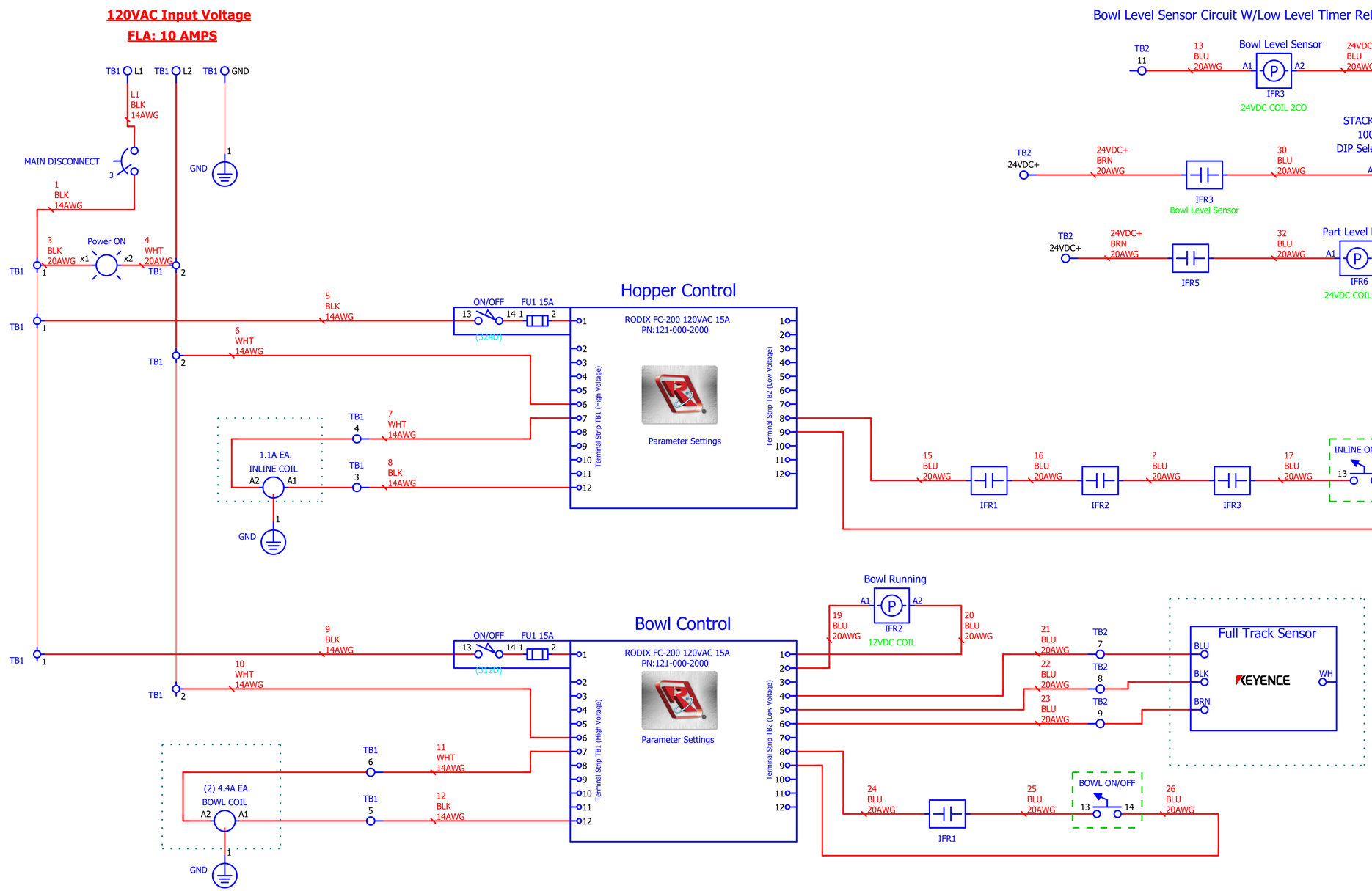

IFR1: Master Enable
IFR2: Bowl Aux. Output
IFR3: Bowl Level Sensor
IFR4: Spare
IFR5: Stacklight Timer Relay
IFR6: Part Level Low Relay

= MOUNTED TO PANEL DOOR

= OUTSIDE CONTROL PANEL

Project description: Rhino Tool House						Drawing number: FC-24-21740	
						Customer number	
Modification	Date	Name		Date	Name	Customer: Feeding Concepts, 15235 Herriman Blvd, 15235 Herriman Blvd	
			Ed.	04/14/25	Zach Beck		
			Appr.	06/28/25	Zachary Beck		
			Feeder Panel Schematic				
Original						Function designation: =	Location designation: +
Replacement of							
Replaced by			Commission				Pg. 3
Previous page 2			Total no. of pages 13			Page group 13	Next page 4

Feeder Sensor Wiring (Local)

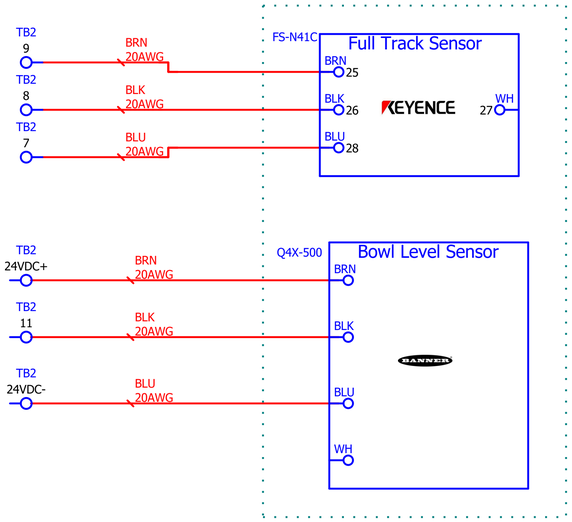

Stacklight Wiring

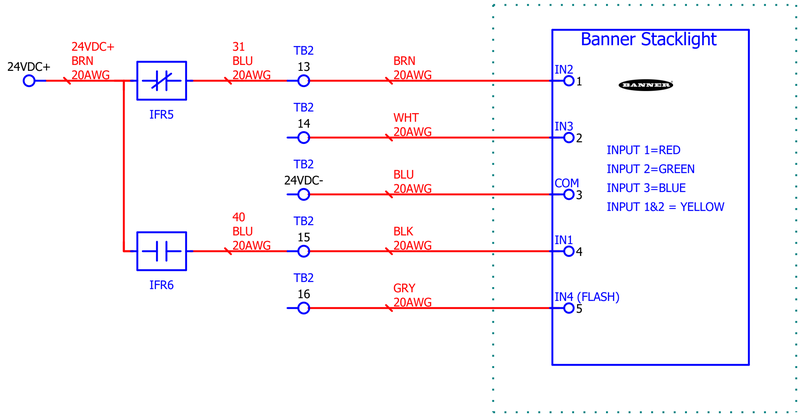

Hopper Magnet Lock Wiring

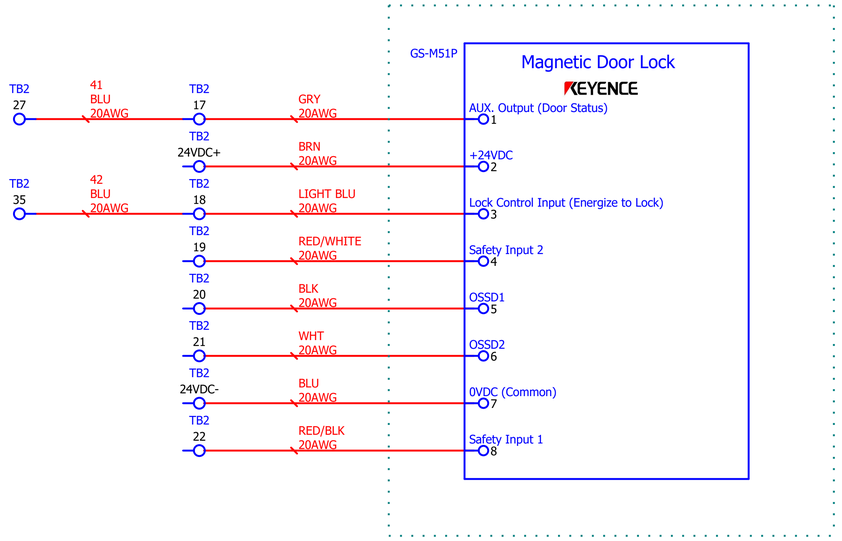

6.2 Indicator Descriptions

■ **Lock link mode (OSSD Operation)**

Indicator	OSSD	Safety inputs	Lock control input	Actuator
Green*1	**ON**	**ON**	**ON**	**Detected**
Red	OFF	ON or OFF	ON or OFF	Not detected
Blinking green	OFF	**ON**	OFF	**Detected**
Orange	OFF	OFF	**ON**	**Detected**
Blinking orange	OFF	OFF	OFF	**Detected**
OFF	Power OFF			
Blinking orange(fast)	OFF	Incorrect actuator is detected. It is different from the high coded actuator memorized by teaching.		
Blinking red	OFF	Error state.		

*1 When the interlock function is set to manual, the indicator will turn orange until the reset/EDM input is operated.

IFR1: Master Enable
IFR2: Bowl Aux. Output
IFR3: Bowl Level Sensor
IFR4: Spare
IFR5: Stacklight Timer Relay
IFR6: Part Level Low Relay

= MOUNTED TO PANEL DOOR

= OUTSIDE CONTROL PANEL

Project description
Rhino Tool House

Drawing number FC-24-21740

Customer number

Modification	Date	Name		Date	Name
			Ed.	04/14/25	Zach Beck
			Appr.	06/28/25	Zachary Beck

Customer
Feeding Concepts
15235 Herriman Blvd
15235 Herriman Blvd

Original
Replacement of
Replaced by
Previous page 3

Feeder Panel Sensor/Light Wiring

Commission
Total no. of pages 13

Function designation =
Location designation +
Page group 13
Pg. 4
Next page 5

CUSTOMER SUPPLIED 24VDC DISTRIBUTION

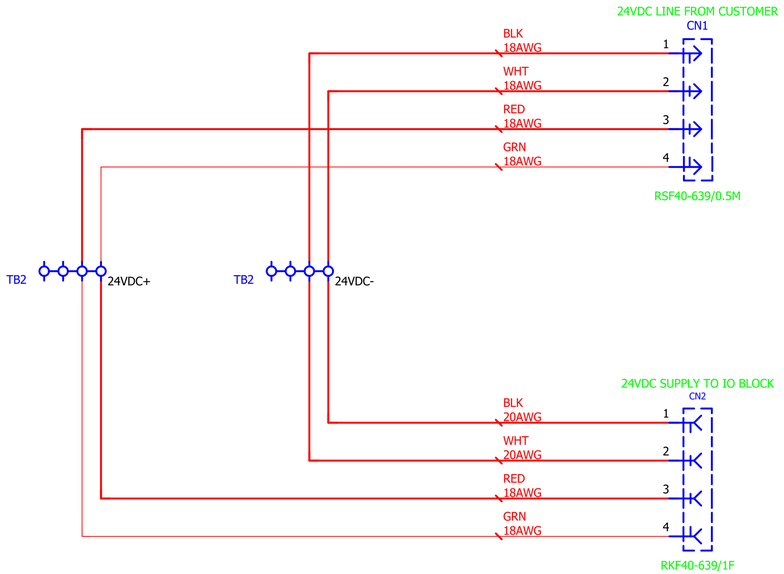

FEEDER CONTROL OUTPUTS

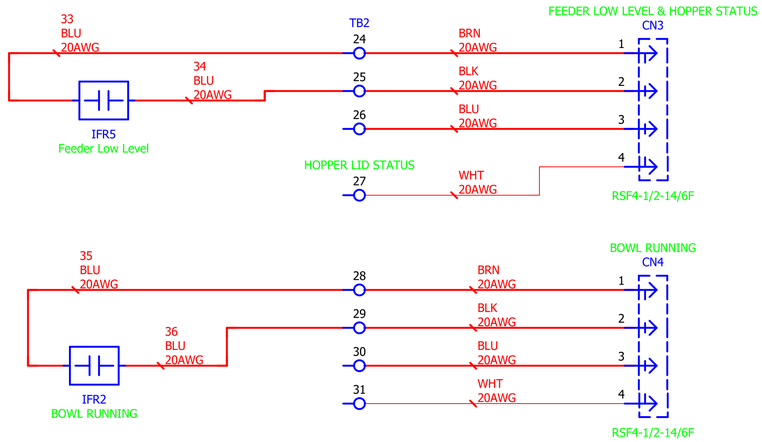

FEEDER CONTROL INPUTS

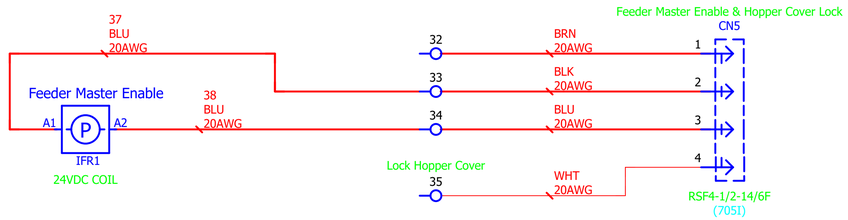

= MOUNTED TO PANEL DOOR

= OUTSIDE CONTROL PANEL

IFR1: Master Enable
IFR2: Bowl Aux. Output
IFR3: Bowl Level Sensor
IFR4: Spare
IFR5: Stacklight Timer Relay
IFR6: Part Level Low Relay

Project description: Rhino Tool House				Drawing number: FC-24-21740	
				Customer number	
Modification	Date	Name		Date	Name
			Ed.	04/14/25	Zach Beck
			Appr.	06/28/25	Zachary Beck
			Feeder Panel Receptacle Schematic		
Original				Customer: Feeding Concepts 15235 Herriman Blvd 15235 Herriman Blvd	
Replacement of				Function designation: =	Location designation: +
Replaced by			Commission		Pg. 5
Previous page 4			Total no. of pages 13	Page group 13	Next page 6

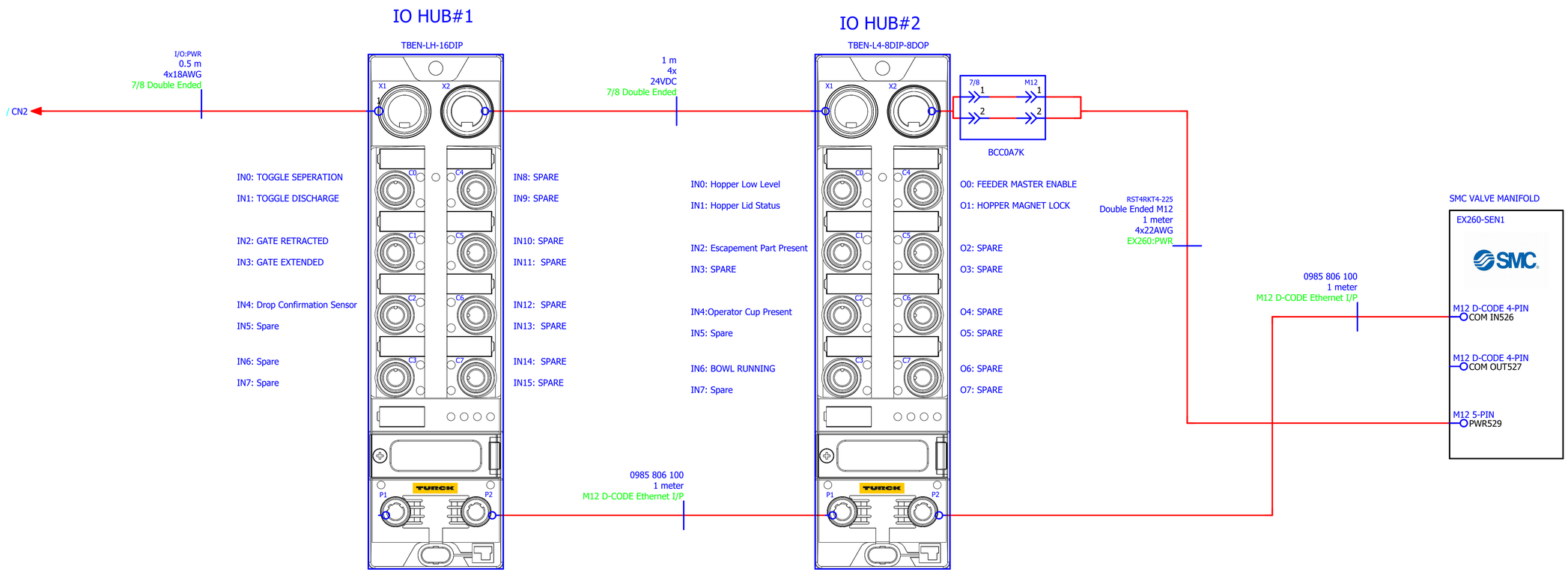

= MOUNTED TO PANEL DOOR

= OUTSIDE CONTROL PANEL

Project description: Rhino Tool House				Drawing number: FC-24-21740	
				Customer number	
Modification	Date	Name		Date	Name
			Ed.	04/14/25	Zach Beck
			Appr.	06/30/25	Zachary Beck
			Field Distribution Layout		
Original				Customer: Feeding Concepts, 15235 Herriman Blvd, 15235 Herriman Blvd	
Replacement of				Function designation: =	Location designation: +
Replaced by			Commission		Pg. 6
Previous page 5			Total no. of pages 13	Page group 13	Next page 7

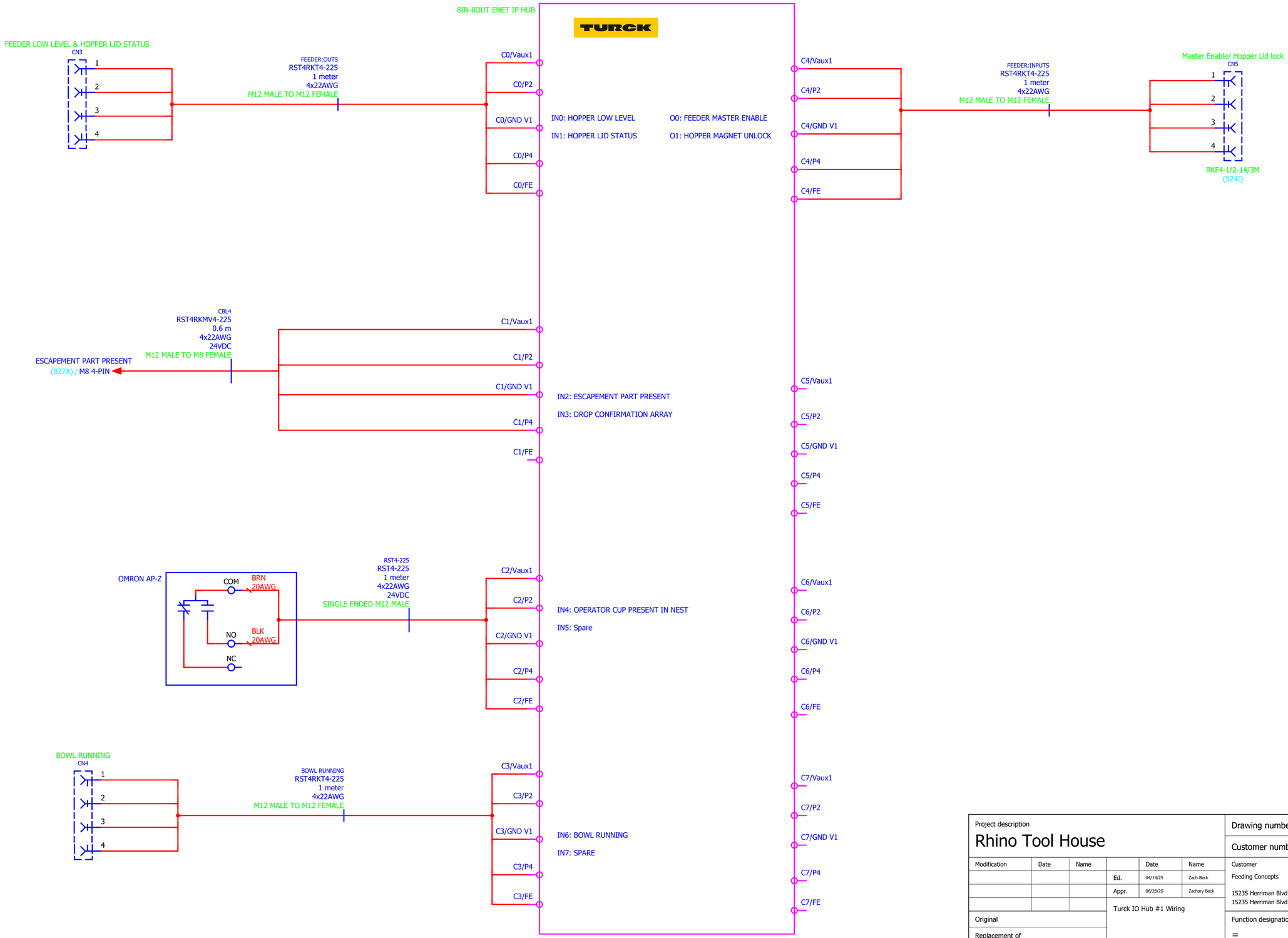

Project description						Drawing number	FC-24-21740
Rhino Tool House						Customer number	
Modification	Date	Name		Date	Name	Customer	
			Ed.	04/14/25	Zach Beck	Feeding Concepts	
			Appr.	06/28/25	Zachary Beck	15235 Herriman Blvd	
			Turck IO Hub #1 Wiring			15235 Herriman Blvd	
Original						Function designation	Location designation
Replacement of						=	+
Replaced by			Commission				Pg. 7
Previous page 6			Total no. of pages 13			Page group 13	Next page 8

Cylinder Sensor Wiring

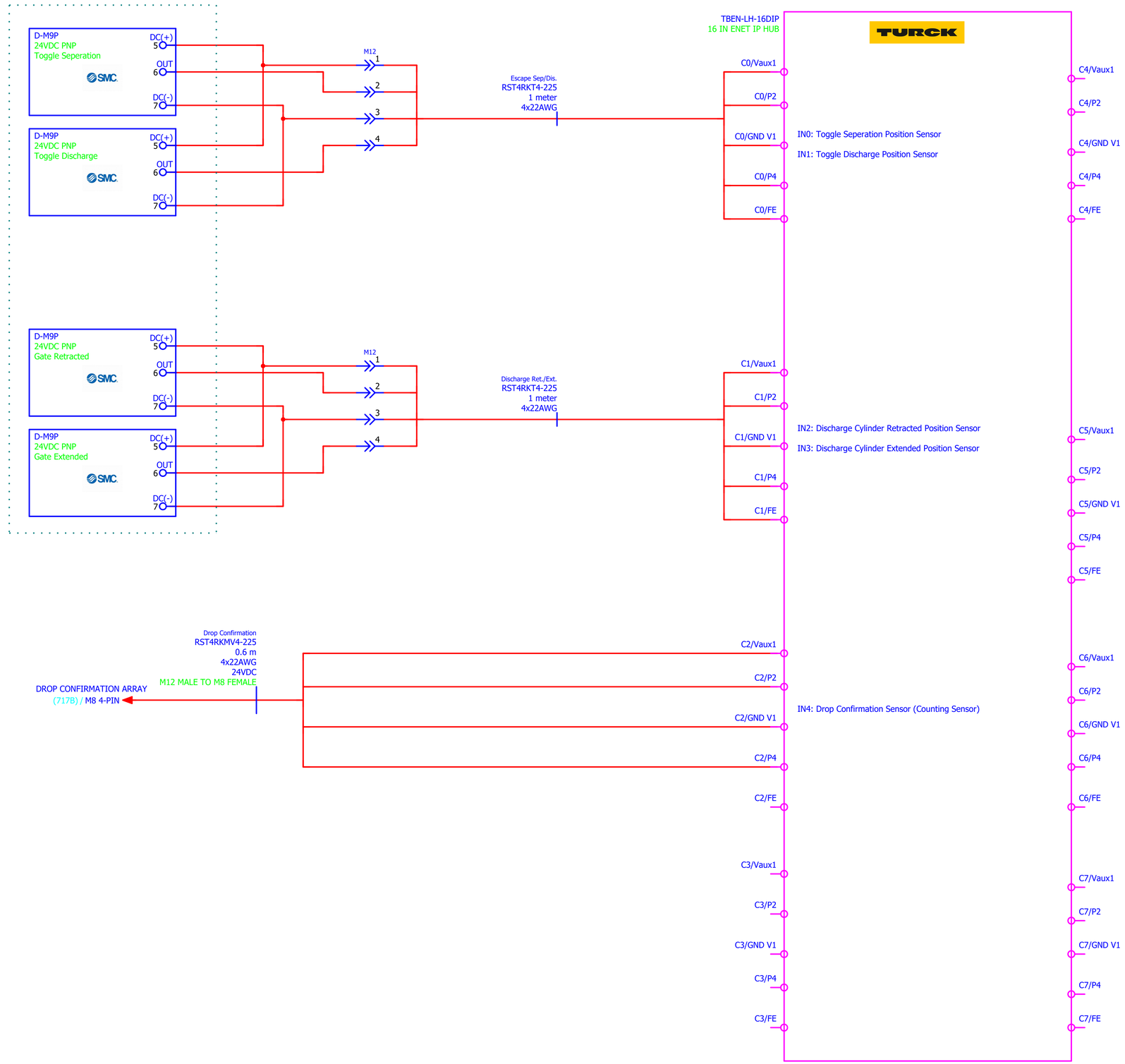

Project description						Drawing number	FC-24-21740
Rhino Tool House						Customer number	
Modification	Date	Name		Date	Name	Customer	
			Ed.	04/14/25	Zach Beck	Feeding Concepts	
			Appr.	06/28/25	Zachary Beck	15235 Herriman Blvd 15235 Herriman Blvd	
			Turck IO Hub #2 Wiring				
Original						Function designation	Location designation
Replacement of						=	+
Replaced by			Commission				Pg. 8
Previous page 7			Total no. of pages 13			Page group 13	Next page 9

IO HUB#2

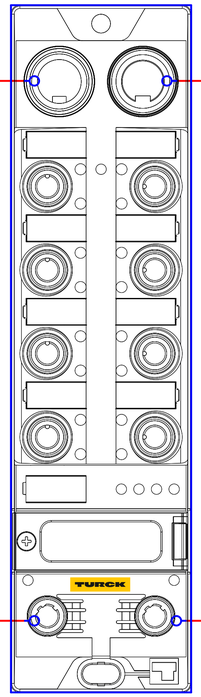

/ FCI PANEL 24VDC POWER

/ RHINO TOOL PLC

RST4RKT4-225
Double Ended M12
1 meter
4x22AWG
EX260:PWR

0985 806 100
1 meter
M12 D-CODE Ethernet I/P

SMC VALVE MANIFOLD

EX260-SEN1

M12 D-CODE 4-PIN
COM IN

M12 D-CODE 4-PIN
COM OUT

M12 5-PIN
PWR

Project description: Rhino Tool House					Drawing number: FC-24-21740
					Customer number
Modification	Date	Name		Date	Name
			Ed.	04/14/25	Zach Beck
			Appr.	06/28/25	Zachary Beck
			SMC EX260-SEN1		Customer: Feeding Concepts, 15235 Herriman Blvd, 15235 Herriman Blvd
Original					Function designation: = / Location designation: +
Replacement of					
Replaced by			Commission		Pg. 9
Previous page 8			Total no. of pages 13		Page group 13 / Next page 10

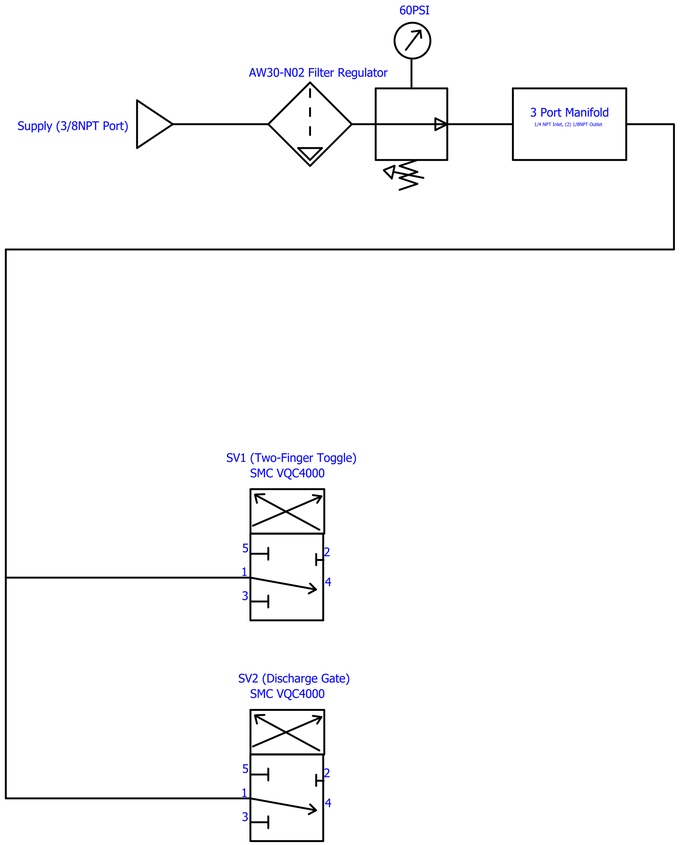

Feeding Concepts	Project name Rhino Tool House FC-24-21740	Drawing number FC-24-21740 Customer code	Customer Feeding Concepts 15235 Herriman Blvd 15235 Herriman Blvd	Modification	Date	Name	Ed. Appr.	Date 04/14/25 06/25/25	Name Zach Beck Zachary Beck	Original Replacement of Replaced by Previous page 9	Pnuematics Schematic Commission Total no. of pages 13	Function designation = Page group 13	Location designation + Pg. 10 Next page 11

Saginaw Enclosure: SCE-20EL2008LP

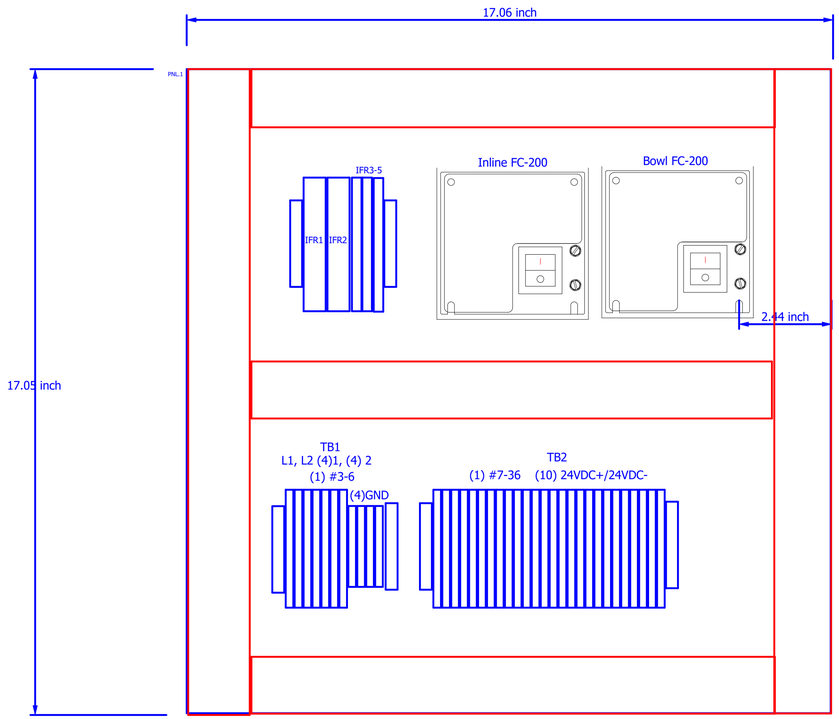

Feeding Concepts	Project name Rhino Tool House FC-24-21740	Drawing number FC-24-21740 Customer code	Customer Feeding Concepts 15235 Herriman Blvd 15235 Herriman Blvd	Modification	Date	Name	Ed. Appr.	Date 04/14/25 05/19/25	Name Zach Beck Zachary Beck	Original Replacement of Replaced by Previous page 10	Panel Layout Commission Total no. of pages 13	Function designation = Page group 13	Location designation + Pg. 11 Next page 12

Saginaw Enclosure: SCE-20EL2008LP

FRONT

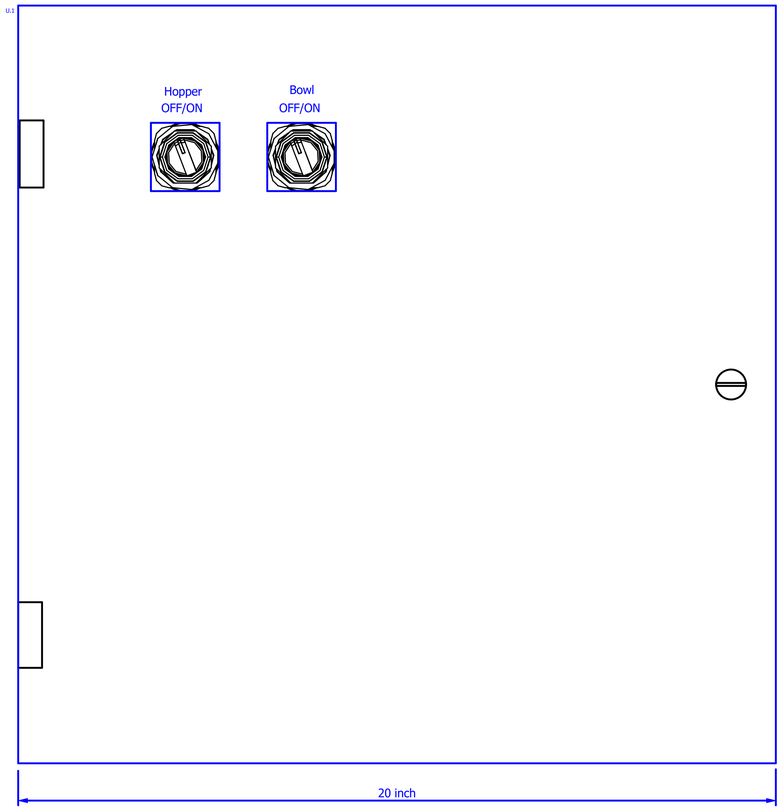

RIGHT SIDE

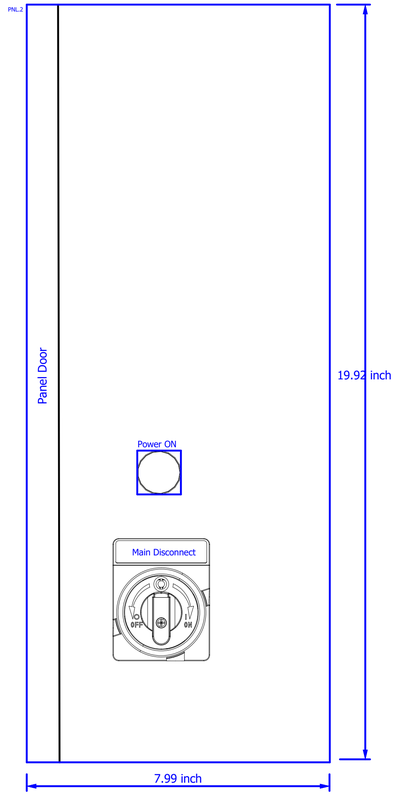

BOTTOM

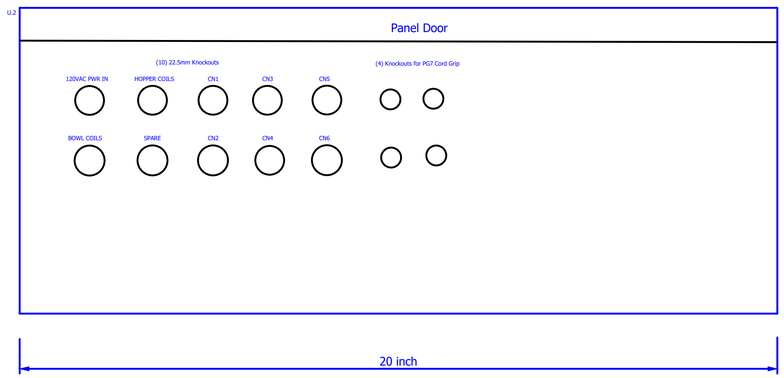

Feeding Concepts	Project name Rhino Tool House FC-24-21740	Drawing number FC-24-21740	Customer Feeding Concepts 15235 Herriman Blvd 15235 Herriman Blvd	Modification	Date	Name	Ed. Appr.	Date 04/14/25 04/26/25	Name Zach Beck Zachary Beck	Original Replacement of Replaced by Previous page 11	Enclosure Layout Commission Total no. of pages 13	Function designation = Page group 13	Location designation + Pg. 12 Next page 13

Saginaw Enclosure: SCE-20EL2008LP

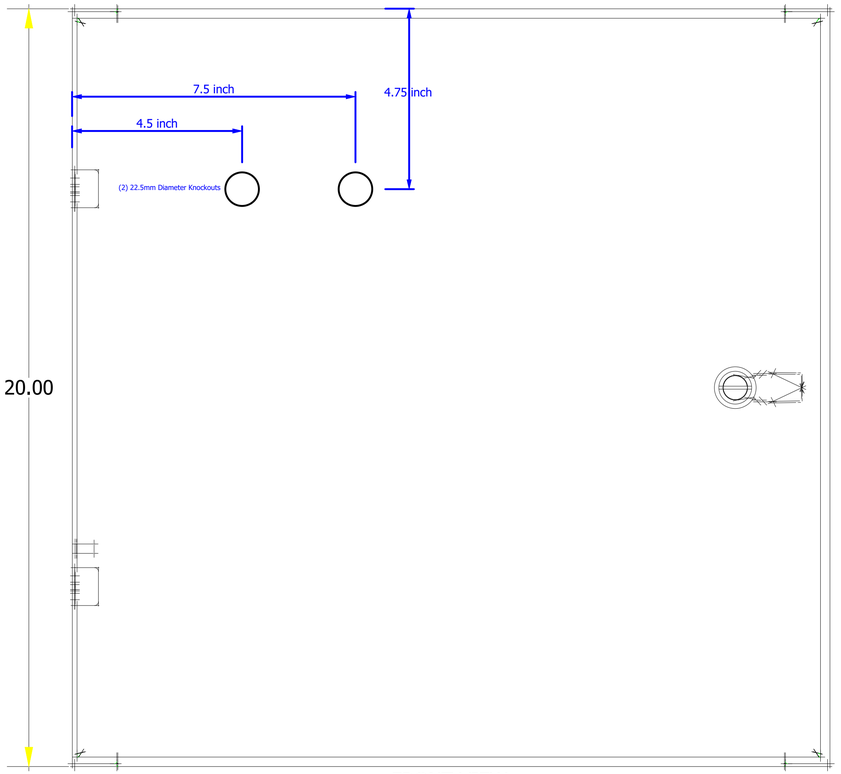

FRONT VIEW

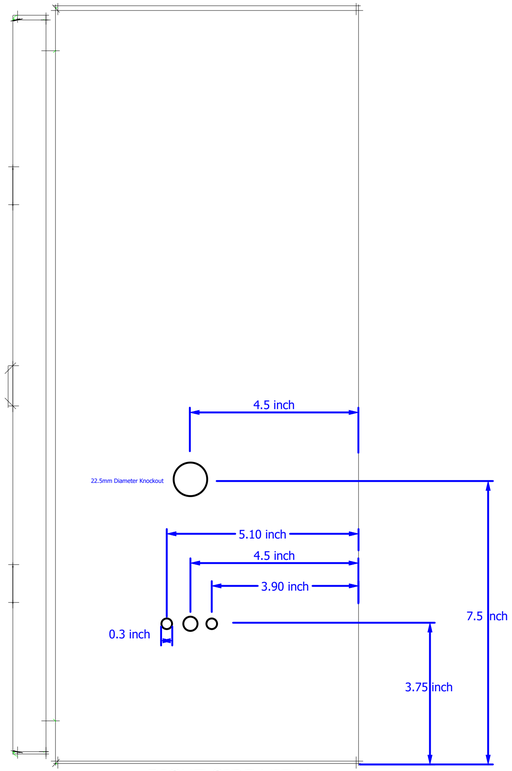

RIGHT SIDE VIEW

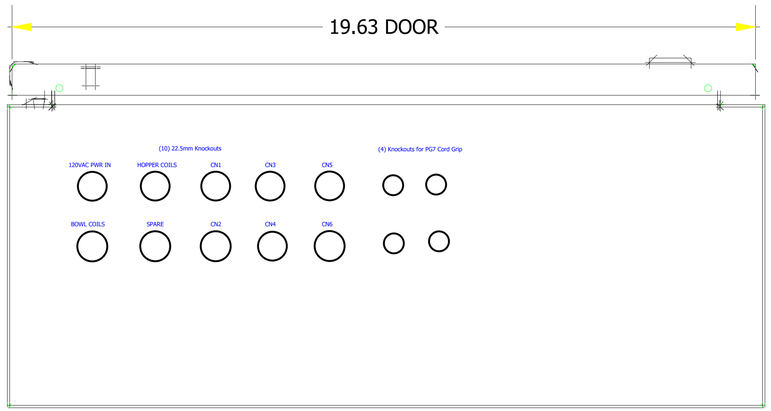

BOTTOM VIEW

Feeding Concepts	Project name Rhino Tool House FC-24-21740	Drawing number FC-24-21740 Customer code	Customer Feeding Concepts 15235 Herriman Blvd 15235 Herriman Blvd	Modification	Date	Name	Ed. Appr.	Date 04/14/25 04/26/25	Name Zach Beck Zachary Beck	Original Replacement of Replaced by Previous page 12	Enclosure Knockout Layout Commission Total no. of pages 13	Function designation = Page group 13	Location designation + Pg. 13 Next page